ECOLOGICAL ROLE OF THE EMU

Coastal emus are part of an endangered population in the Clarence Valley that disperse seed and promote germination of many of our native shrubs, herbs and grasses. Allowing coastal emus to move freely in our landscape helps the birds and is also critical for maintaining healthy, native vegetation.



ROADS INCREASE STRIKE RISK

Fences that are built close to the roadside can stop emus from crossing the road easily. Instead, emus linger at the roadside, placing them at greater risk of being hit by cars.

You can help avoid this by being mindful on the roads. Slow down if you see an emu beside the road or attempting to cross and allow it the space to complete its passage.





CHECK YOUR FENCES REGULARLY

Checking your fences regularly will help you to gain more information about how emus and other wildlife use your property, you can respond to any fence damage promptly and can respond to any injured/ entangled wildlife.

INJURED, SICK OR ORPHANED EMUS

If you suspect a coastal emu needs help, please contact **WIRES on 1300 094 737.** Experienced, trained handlers will advise what should be done to help the emu.

NSW GOVERNMENT

This project has been assisted by the New South Wales Government through its Environmental Trust

Clarence Valley Council
council@clarence.nsw.gov.au
02 6643 0200
www.clarence.nsw.gov.au

clarence VALLEY COUNCIL



EMU-FRIENDLY FENCING

Considering coastal emu in property planning

clarence VALLEY COUNCIL

PROTECT OUR COASTAL EMU

Residents are encouraged to consider the needs of native wildlife when installing fencing and choose wildlife-friendly options. Rethinking your fencing needs could play a critical role in protecting the endangered coastal emu.

HOW DOES FENCING AFFECT EMUS?

Emus are large birds that forage across vast areas of habitat. As they move through the landscape, certain kinds of fencing or thick weed growth can block their access to food trees and suitable habitat.

Different fencing designs and materials affect emus differently. Below are some options for reducing your impact on emus in our area.



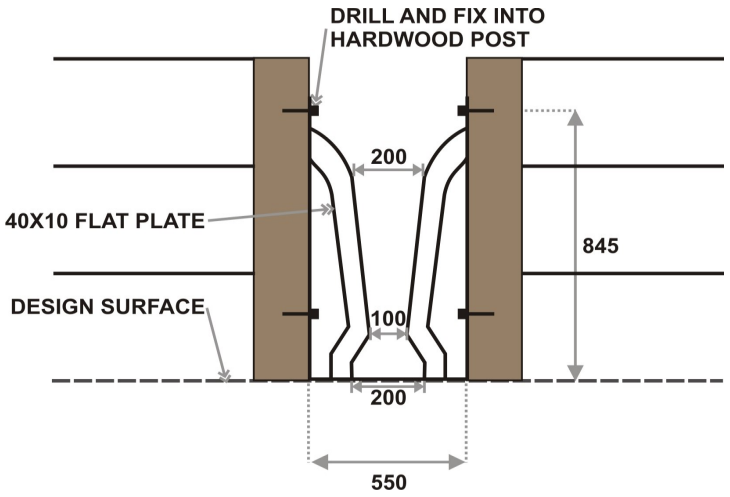

A squeeze stile coastal emu gate, based on the Scottish Natural Heritage metal squeeze stile 3.9 design and adapted by Roads and Maritime Services.

CONSIDER ALTERNATIVES

It's natural to want to mark out a property boundary, but if a fence isn't needed (*e.g.* to keep stock contained), then having no fence at all will benefit the endangered coastal emu population. A row of spaced trees or other vegetation may provide the boundary you desire.

EMU-FRIENDLY FENCING

Emus can struggle to get through a five-strand fence, so changing to four strands can make a difference. Steel tension droppers can limit the flexibility of the wire spacing and should be avoided.

You can create gateways in your fence to allow emus to move through the landscape. This could mean removing part of the fence, dropping the height at known crossing points, or installing offset strainer posts.



Alternatively, you could install a 'squeeze stile', which allow emus to pass through a vertical space while excluding passage to larger animals such as livestock.

AVOID DANGEROUS FENCING

Mesh, barbed wire, and electric fencing are discouraged due to the impact on emus. Removing barbed wire from the top and bottom strands benefits emus, as well as other wildlife (such as flying-foxes, owls, and macropods). Consider covering harmful wires in emu travel pathways with split polypipe.

INCREASE VISIBILITY

Wire fencing is often hard to see and poses a danger to wildlife moving at speed. Accidents can be prevented by increasing the visibility of the fence, through installation of white nylon sighter wires or reflective flicker tapes. Avoid placing barbed wire fences near vegetation that reduces the ability of the animals to see the fence.

For further information, go online and search 'Clarence Valley Council coastal emus in the Clarence'